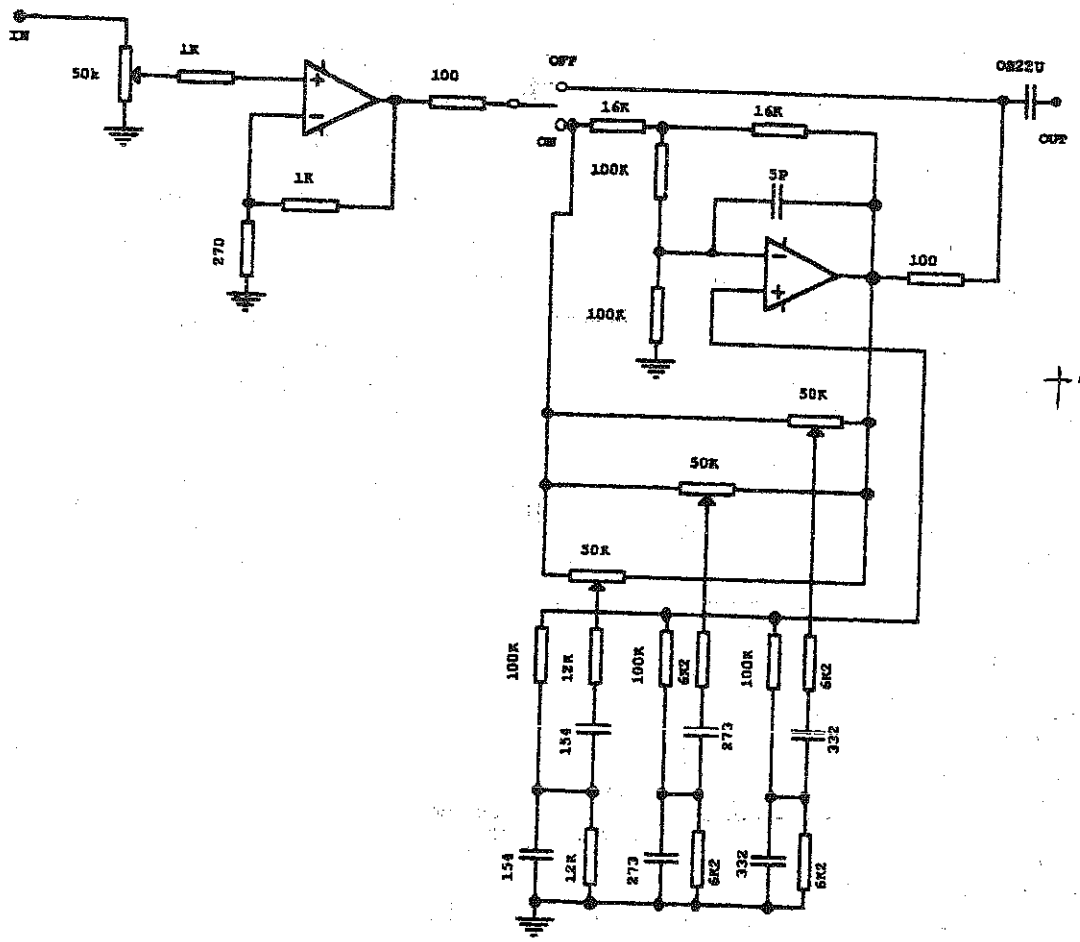

A-20

十倍放大加高、中、低音调

Title		
Size A4	Number	Revision
Date: 3-Aug-1998		Sheet of
File: C:\CCC\PROTEL\A-20.SCH		Drawn By: